Cable output length 2m:

Power :

One shielded class 6 cable coded (4x1.5mm²)1,2,3 green/yellow overall ⌀10.2

Thermal sensors :

One shielded class 6 cable (2x2x0.25mm²) overall ⌀7

Brown-White : PTC

Green-Yellow : KTY84

Minimum bending radius (except for the first 50mm) :

120mm for power cable

84mm for sensors cable

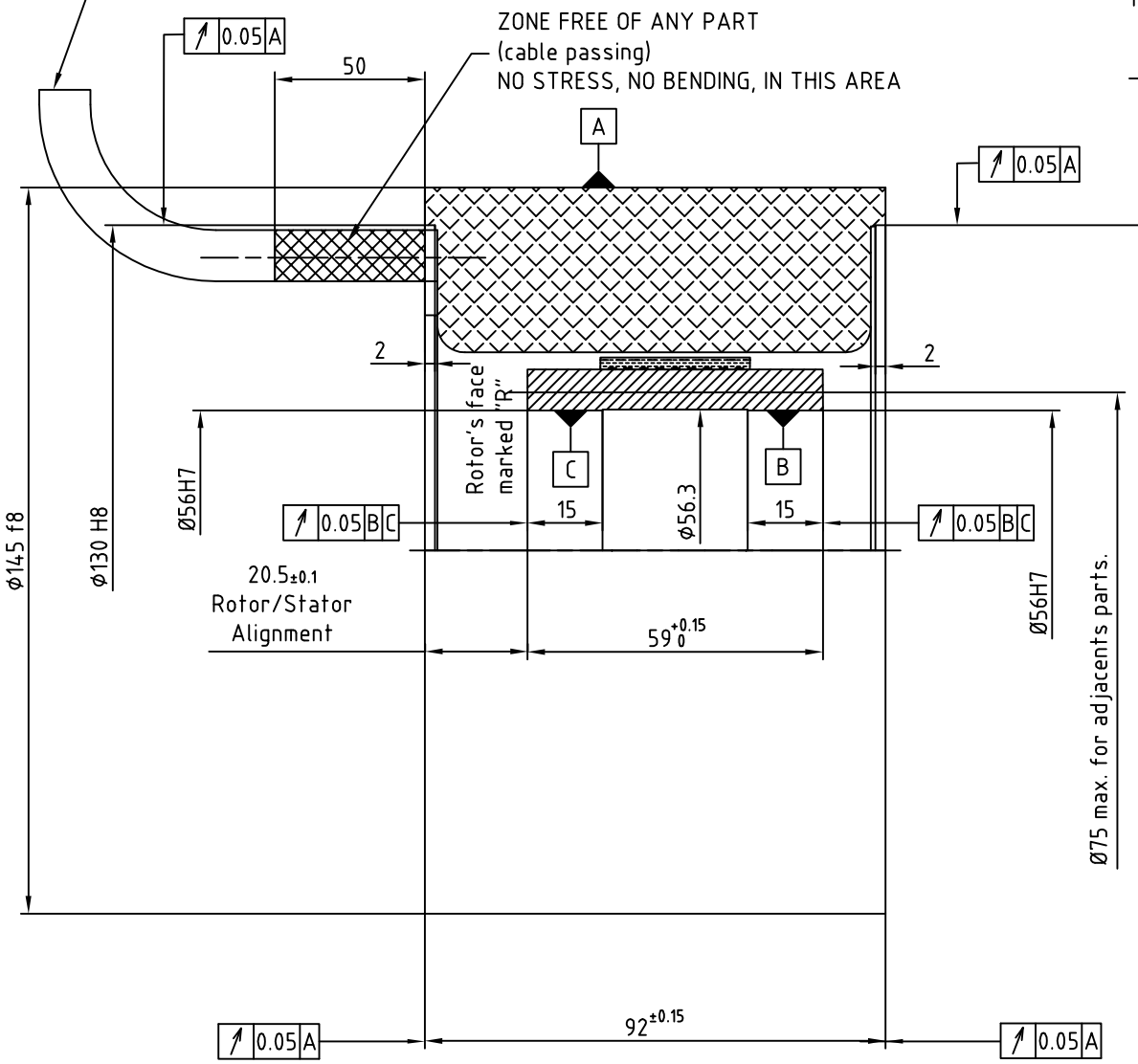

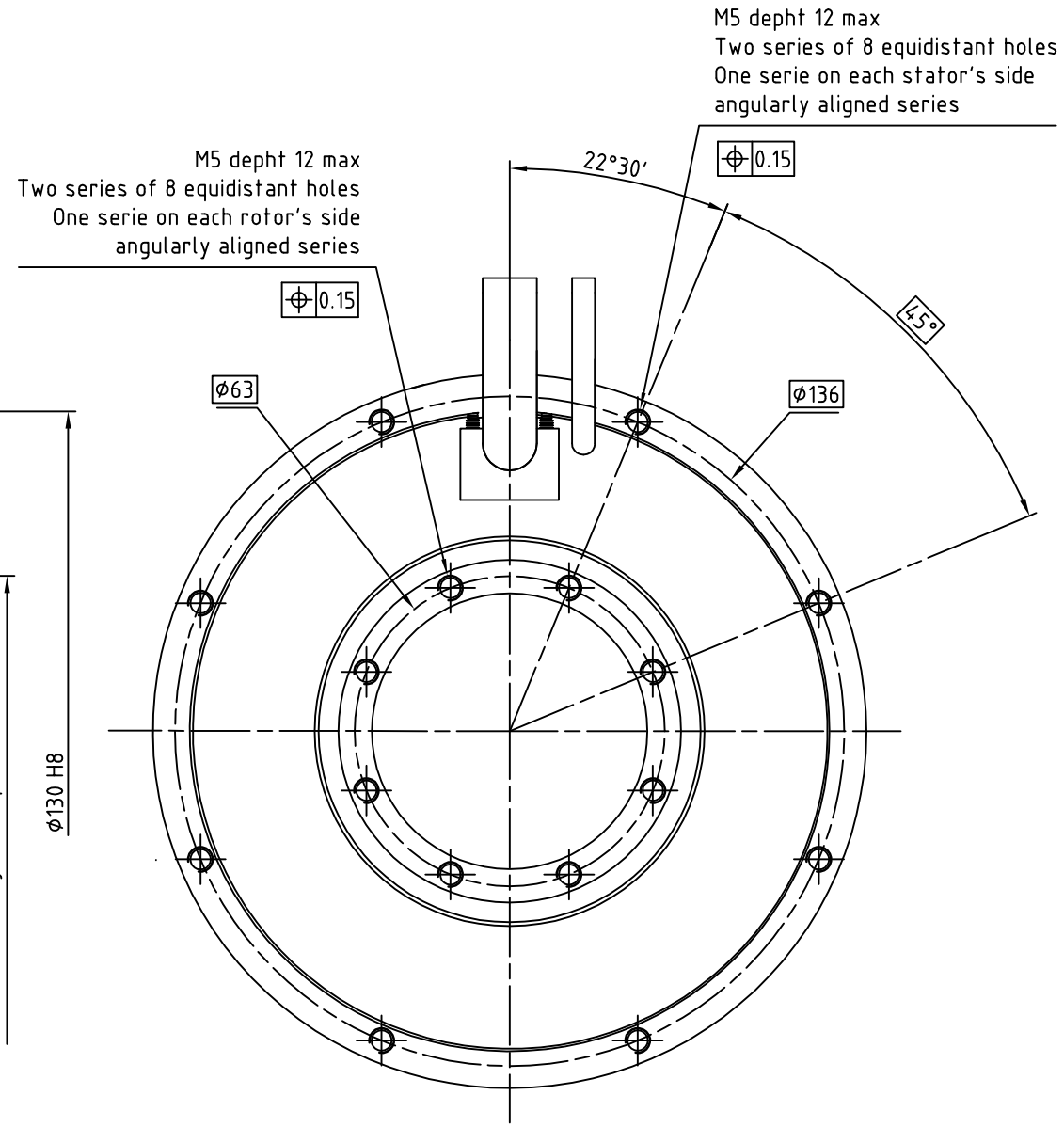

NOTA:
Rotor is not fitted in the stator
For more information about mounting see
document 145STK0-WA002

ALXION

AUTOMATIQUE & PRODUCTIQUE
Parc Technologique des Fossés Jean
92712 COLOMBES Cedex
Tél: 0141306304 - Fax: 0141306136

145STK1M1XXXXXX