Cable output length 2m:

Power :

One shielded class 6 cable coded 1,2,3 green/yellow

Thermal sensors :

One shielded class 6 cable ($2x2x0.25mm^2$)

Brown-White : PTC

Green-Yellow : KTY84

Minimum bending radius (except for the first 50mm) :

See table

| Cable | Ø | R min. |
|---|---|---|
| 2x2x0.25 | 7 | 84 |
| 4x1.5 | 10.2 | 120 |
| 4x2.5 | 11.4 | 135 |
| 4x4 | 13.1 | 155 |
| 4x6 | 15.9 | 190 |
| 4x10 | 18.8 | 225 |

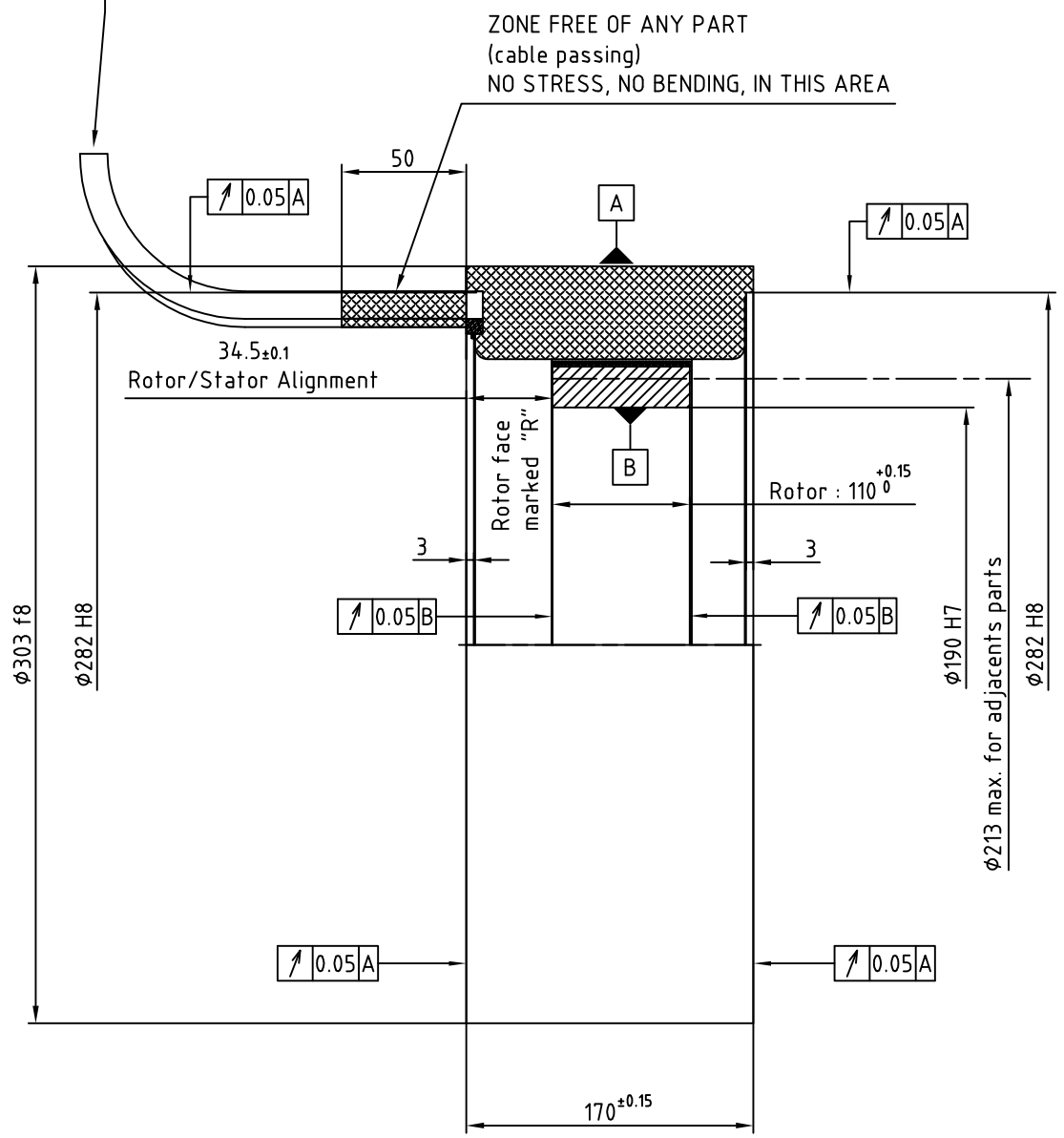


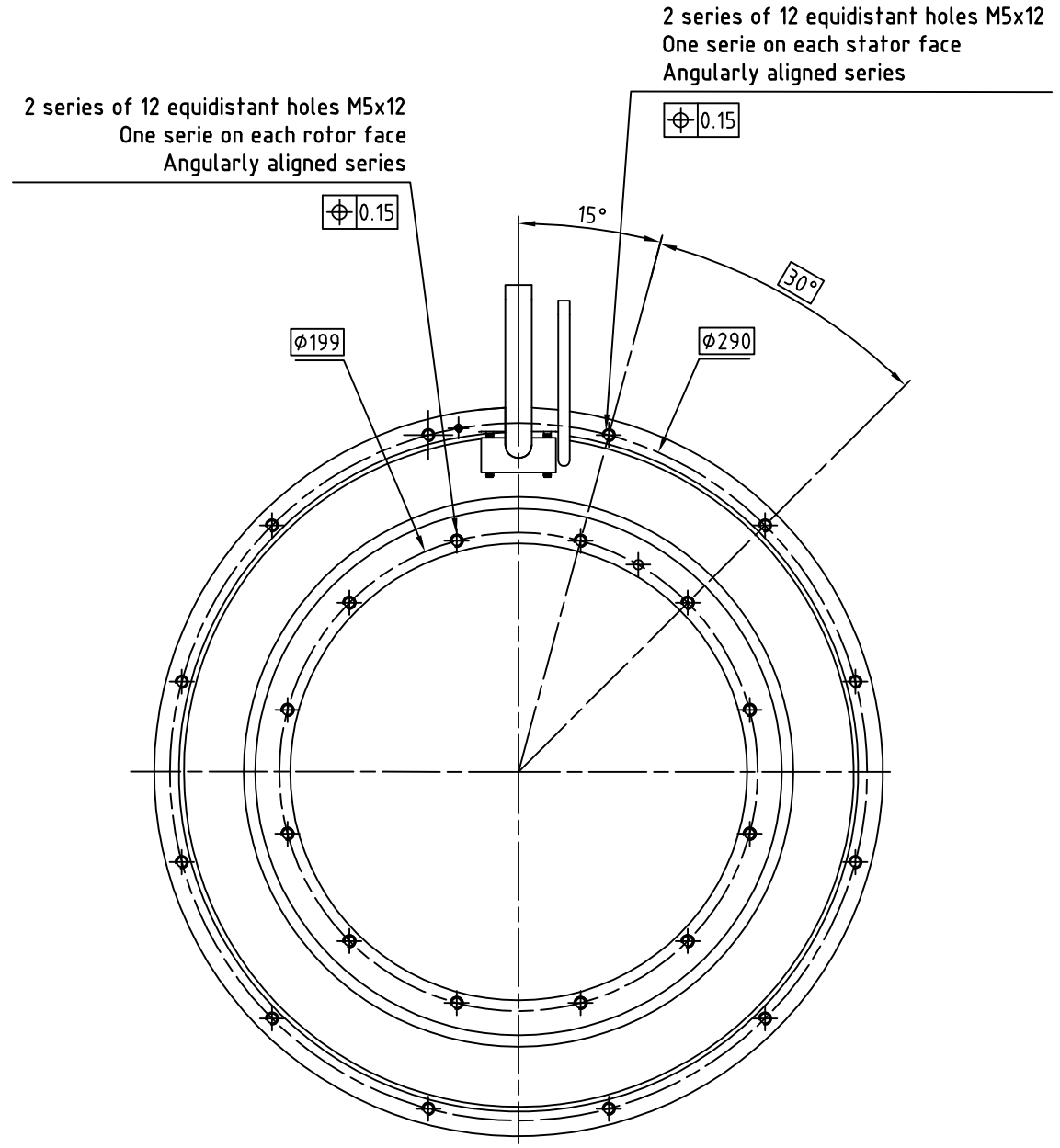


NOTA:
Rotor is not fitted in the stator
For more information about mounting see document 300STK0-WA002


**ALXION**

AUTOMATIQUE & PRODUCTIQUE
Parc Technologique des Fossés Jean
92712 COLOMBES Cedex
Tél: 0141306304 - Fax: 0141306136


300STK4M1XXXXXX